MPI TS2000 Series | 200 mm Automated Probe Systems

For reliable DC, RF and High Power Production Test Measurements

FEATURES / BENEFITS

Designed for wide variety of On-Wafer Production Applications

- DC-IV / DC-CV / Pulsed-IV applications
- RF applications up to 67 GHz & 4-port setup
- High Power production application up to 10 kV / 600 A
- IC Design validation from ambient to 300 °C

Production Reliability

- Designed for 24/7 production reliability
- Integrated passive vibration isolation table
- Optional active vibration isolation base
- Ready for temperature ambient to 300 °C

Ergonomic Design and Options

- Designed with easy single wafer front loading
- Large Probe Platen supporting up to 12x DC or 4x DC + 4x RF MicroPositioners or standard 4.5" probe card holder
- Available with various chuck options and wide range of accessories such as 4.5" probe card adaptor, DC/RF MicroPositioners, microscopes to support various application requirements

SPECIFICATIONS

Chuck XY Stage (Programmable)	
Travel range	210 mm x 340 mm (8.3 x 13.4 in)
Resolution	0.1 µm
Accuracy	< 4.0 µm
Repeatability	< 1.0 µm
XY stage drive	Closed-loop high precision servo motor PID control
Speed	5-Speed XY chuck stage speed movement
Max. movement speed	100 mm / sec.

Chuck Z Stage (Programmable)	
Travel range	10 mm (0.4 in)
Resolution	0.2 µm
Accuracy	< 2.0 µm
Repeatability	< 1.0 µm
Z stage drive	Closed-loop high precision servo motor PID control
Speed	5-Speed Z chuck stage adjustable speed movement
Max. movement speed	30 mm / sec.

SPECIFICATIONS

Chuck Theta Stage (Programmable)

Travel range	± 5.0°
Resolution	0.0004°
Accuracy	< 3.0 µm (measured at the edge of the 200 mm chuck)
Repeatabilty	< 2.0 µm
Theta stage drive	High resolution stepper motor with linear encoder feedback system

MICROSCOPE MOVEMENT

	XYZ Programmable	XY manual, Z programmable	XYZ manual
XY - Travel range*	50 x 50 mm	50 x 50 mm	50 x 50 mm / 80 x 80 mm
Resolution	1 µm (0.04 mils)	< 5 µm (0.2 mils)	< 5 µm (0.2 mils)
Repeatability	< 2 µm (0.08 mils)	N/A	N/A
Accuracy	< 5 µm (0.2 mils)	N/A	N/A
Z - Travel range	140 mm	140 mm	140 mm, pneumatic
Resolution	0.05 µm (0.002 mils)	0.05 µm (0.002 mils)	N/A
Repeatability	< 2 µm (0.08 mils)	< 2 µm (0.08 mils)	< 2 µm (0.08 mils)
Accuracy	< 4 µm (0.16 mils)	< 4 µm (0.16 mils)	N/A

**In case of ShielDEnvironment™ X x Y: 25 mm x 25 mm*

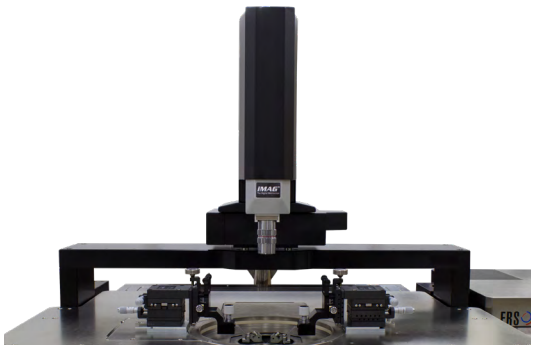

PROBE PLATEN

Specifications

Material	Nickel plated steel
Chuck top to platen top	Min. 28 mm
Feature	Configurable with Probecard and MicroPositioners
Max. No. of MicroPositioners	12x DC MicroPositioners or 4x DC + 4x RF MicroPositioner Setup

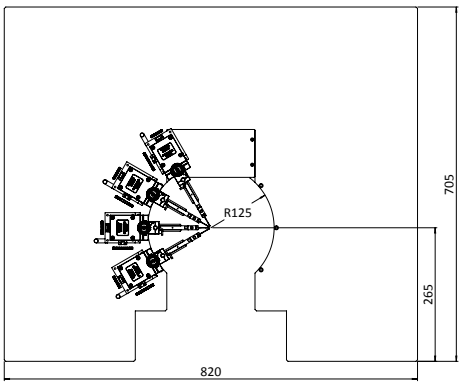

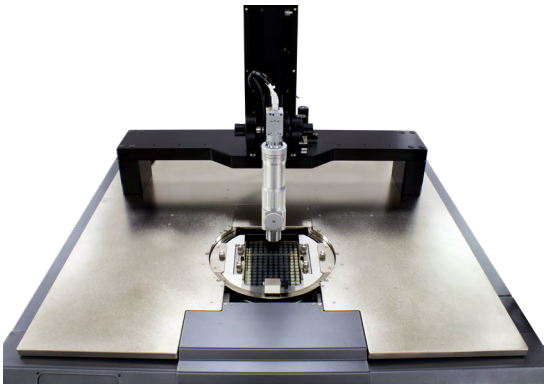

Large Probe Platen supporting up to 12x DC or 4x DC + 4x RF MicroPositioners or standard 4.5” probe card holder

KEY FEATURE

Wafer Loading

Loading or unloading of up to 200 mm wafer, single IC or substrate is straight forward and intuitive. No roll-out stage allows for a simple method of automation for RF calibration and probe card cleaning. Easy access to the AUX chucks for handling of calibration substrates, cleaning or contact check pads.

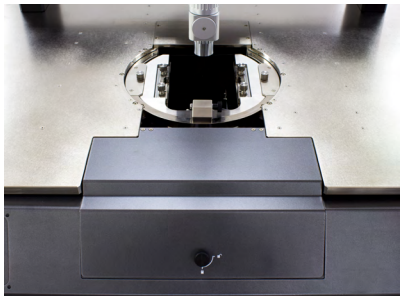

Integrated Controls

The thermal chuck can be operated by using the fully integrated touchscreen display, placed at convenient location in front of the operator for fast and operation and immediate feedback.

The intelligent hardware control panel is completely integrated into the probe system and is designed based on decades of experience and customer interactions to provide faster, safer and convenient system control and test operation.
The Keyboard and mouse are strategically located to control the software if necessary and will also control the Windows® based instrumentation.

Easy to access vacuum control for the chuck (supports center at 4x4 mm, 100 mm, 150 mm and 200 mm) and the auxiliary chucks as well.
USB connection to the systems controller, right in front for convenient data exchange.

Probe Hover Control™ Option

MPI Probe Hover Control PHC™ allows easy manual control of probe contact and separation to wafer. Separation distance can accurately control with micrometer feedback for probe to wafer/pad positioning. Ease of use guarantees the safest operation by minimizing error during critical set-up and probe change operations.

SOFTWARE SOLUTION

MPI automated engineering probe systems are controlled by a unique and revolutionary, multi-touch operation SENTIO® Software Suite – simple and intuitive operation saves significant training time, the Scroll, Zoom, and Move commands mimic modern smart mobile devices and allows everyone to become an expert in just minutes. Switching between the active application and the rest of the APPs is just a matter of a simple finger sweep.

By implementing intuitive multi-touch operation, QAlibria® provides crisp and clear guidance to the RF calibration process, minimizes configuration mistakes and helps to reach accurate calibration results in fastest time. QAlibria® offers industry standard and advanced calibration methods.
QAlibria® includes TOSM (SOLT), TMR, TMRR methods, and 4-port calibration capability additionally to the integration of NIST StatistiCal calibration packages providing easy access to the NIST multiline TRL metrology-level calibration and uncertain analysis.

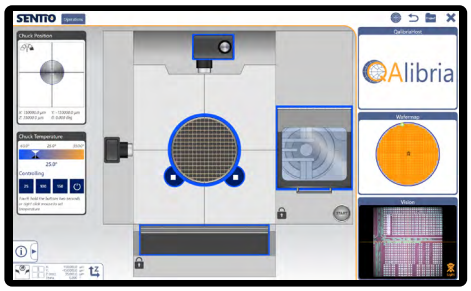

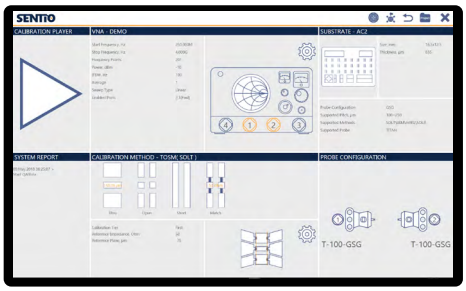

INTEGRATED DARK BOX

TS2000-D and TS2000-DP are designed with fully integrated DarkBox.
The design allows light sensitive measurement capability and in case of TS2000-DP interlock system for safety measurements up to 10kV and 600A.
See all dimensions on the last page.

DC PROBES - SELECTION GUIDE

	Coax Probe (PA-C)	Triax Probe (PA-T)	Kelvin Probe (PA-K)
Max voltage	500 V	500 V	500 V
Temperature range	-60 °C to 300 °C	-60 °C to 300 °C	-60 °C to 300 °C
Leakage current	< 0.8 pA	< +/- 20fA	< +/- 10fA
Connectivity	SMB	Standard Triax	SSMC
Connectivity type	Single Coaxial	Single low noise Triaxial	Force/Sense low noise Triaxial
Characteristics Impedance	50 Ohms	50 Ohms	50 Ohms
Residual Capacitance	< 95 fF	< 95 fF	< 95 fF
Probe holder material	Brass	Brass	Brass (Fully Guarded to the Tips)
Probe tips material	Tungsten	Tungsten	Tungsten
Probe tips sizes	0.5 µm – 25 µm	0.5 µm – 25 µm	0.5 µm – 5 µm
Minimum pad size	25 µm x 25 µm	25 µm x 25 µm	25 µm x 25 µm

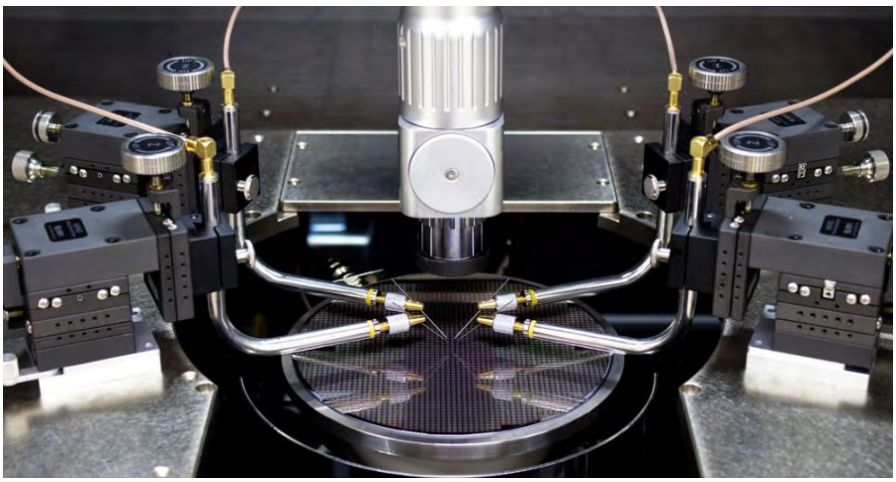

Typical MPI configuration with Coax Probes.

NON-THERMAL CHUCKS

Standard Wafer Chuck

Connectivity	Coax BNC (f)
Diameter	210 mm
Material	Stainless steel
Chuck surface	Planar with centric engraved vacuum grooves
Vacuum grooves sections (diameter)	3, 27, 45, 69, 93, 117, 141, 164, 194 mm
Vacuum actuation	Multizone control - All connected in meander shape, center hole in 3 mm diameter
Supported DUT sizes	Single DUTs down to 5x5 mm size or wafers 50 mm (2 in) thru 200 mm (8 in)*
Surface planarity	≤± 5 µm
Rigidity	< 15 µm / 10 N @edge

**Single DUT testing requires higher vacuum conditions dependent upon testing application.*

RF Wafer Chuck

Connectivity	Kelvin Triax (f)
Diameter	210 mm with 2 integrated AUX areas
Material	Nickel plated aluminum (flat with 0.5 mm holes)
Chuck surface	Planar with 0.5 mm diameter holes in centric sections
Vacuum holes sections (diameter)	3, 27, 45, 69, 93, 117, 141, 164, 194 mm
Vacuum actuation	Manual switch between Center (4 holes), 100, 150, 200 mm (4, 6, 8 in)
Supported DUT sizes	Single DUTs down to 5x5 mm size or wafers 100 mm (4 in) thru 200 mm (8 in)*
Surface planarity	≤± 5 µm
Rigidity	< 15 µm / 10 N @edge

**Single DUT testing requires higher vacuum conditions dependent upon testing application.*

High Power Wafer Chucks

Connectivity 1	10 kV Coaxial (Banana or SHV)
Connectivity 2	Kelvin Triax (f), 3 kV or 10 kV Coaxial
Diameter	210 mm with 2 integrated AUX areas
Material	Gold plated aluminum (flat with 100 µm holes)
Chuck surface	Planar with 0.5 mm diameter holes in centric sections
Vacuum holes sections (diameter)	3, 27, 45, 69, 93, 117, 141, 164, 194 mm
Vacuum actuation	Manual switch between Center (4 holes), 100, 150, 200 mm (4, 6, 8 in)
Supported DUT sizes	Single DUTs down to 5x5 mm size or wafers 100 mm (4 in) thru 200 mm (8 in)*
Surface planarity	≤± 5 µm
Rigidity	< 15 µm / 10 N @edge

**Single DUT testing requires higher vacuum conditions dependent upon testing application.*

Auxiliary Chuck

Quantity	2 AUX chucks
Position	Integrated to front side of main chuck
Substrate size (W x L)	Max. 25 x 25 mm (1 x 1 in)
Material	Ceramic, RF absorbing material for accurate calibration
Surface planarity	≤± 5 µm
Vacuum control	Controlled independently, separate from chucks

Electrical Specification (Coax)

Operation voltage	In accordance with EC 61010, certificates for higher voltages available upon request
Maximum voltage between chuck top and GND	500 V DC
Isolation	> 2 GΩ

Electrical Specification (Triax)

	Standard Chuck (10 V)	High Power Chuck (10 V)
Chuck isolation	> 100 GΩ	> 30 TΩ
Force to guard	> 100 GΩ	> 30 TΩ
Guard to shield	> 10 GΩ	> 500 GΩ
Force to shield	> 50 GΩ	> 100 GΩ

THERMAL CHUCKS

Specifications of MPI ERS AirCool® Technology

	Ambient to 150/200 °C	20 °C to 150/200 °C
Connectivity	Coax BNC (f)	Coax BNC (f)
Temperature control method	Cooling air / Resistance heater	Cooling air / Resistance heater
Coolant	Air (user supplied)	Air (user supplied)
Smallest temperature selection step	0.1 °C	0.1 °C
Chuck temperature display resolution	0.1 °C	0.1 °C
External touchscreen display operation	N/A	N/A
Temperature stability	±0.5 °C	±0.5 °C
Temperature accuracy	±1 °C	±1 °C
Control method	DC/PID	DC/PID
Chuck pinhole surface plating: 200 °C	Nickel	Nickel
Vacuum actuation	Manual switch between Center (4 holes), 100, 150, 200 mm (4, 6, 8 in)	
Temperature sensor	Pt100 1/3DIN	Pt100 1/3DIN
Temperature uniformity	< ±1 °C	< ±1 °C
Surface flatness and base parallelism	< ±15 µm	< ±15 µm
Max. Voltage between		
Force-to-GND	500 V DC	500 V DC
Heating rates*	35 to 150 °C < 12 min 35 to 200 °C < 18 min	20 to 150 °C < 12 min 20 to 200 °C < 23 min
Cooling rates*	150 to 35 °C < 15 min 200 to 35 °C < 18 min	150 to 20 °C < 18 min 200 to 20 °C < 30 min
Leakage @ 10 V	N/A	N/A
Electrical isolation	> 0.5 T Ω at 25 °C	> 0.5 T Ω at 25 °C
Capacitance	< 750 pF	< 750 pF

**Typical data for all chucks based on FPS requirements.*

Specifications of MPI ERS AirCool® PRIME Technology

	Ambient to 200/300 °C	20 °C to 200/300 °C	Ambient to 200/300 °C	20 °C to 200/300 °C
Chuck type	RF	RF	Ultra low noise	Ultra low noise
Connectivity	Kelvin Triax (f)	Kelvin Triax (f)	Kelvin Triax (f)	Kelvin Triax (f)
Temperature control method	Cooling air / Resistance heater	Cooling air / Resistance heater	Cooling air / Resistance heater	Cooling air / Resistance heater
Coolant	Air (user supplied)	Air (user supplied)	Air (user supplied)	Air (user supplied)
Smallest temperature selection step	0.1 °C	0.1 °C	0.1 °C	0.1 °C
Chuck temperature display resolution	0.01 °C	0.01 °C	0.01 °C	0.01 °C
External touchscreen display operation	Yes	Yes	Yes	Yes
Temperature stability	±0.08 °C	±0.08 °C	±0.08 °C	±0.08 °C
Temperature accuracy	±0.1 °C	0.1 °C	0.1 °C	0.1 °C
Control method	Low noise DC/PID	Low noise DC/PID	Low noise DC/PID	Low noise DC/PID
Chuck pinhole surface plating: 200°C / 300°C	Nickel / Gold	Nickel / Gold	Nickel / Gold	Nickel / Gold
Vacuum actuation	Manual switch between Center (4 holes), 100, 150, 200 mm (4, 6, 8 in)			
Temperature sensor	Pt100 1/3DIN, 4-line wired	Pt100 1/3DIN, 4-line wired	Pt100 1/3DIN, 4-line wired	Pt100 1/3DIN, 4-line wired
Temperature uniformity	< ±0.5 °C at ≤ 200 °C < ±1 °C at > 200 °C	< ±0.5 °C at ≤ 200 °C < ±1 °C at > 200 °C	< ±0.5 °C at ≤ 200 °C < ±1 °C at > 200 °C	< ±0.5 °C at ≤ 200 °C < ±1 °C at > 200 °C
Surface flatness and base parallelism	< ±12 µm	< ±12 µm	< ±12 µm	< ±12 µm
Max. Voltage between				
Force-to-GND	600 V DC	600 V DC	600 V DC	600 V DC
Force-to-Guard	100 V DC	100 V DC	600 V DC	600 V DC
Guard-to-GND	400 V DC	400 V DC	400 V DC	400 V DC
Heating rates*	35 to 200 °C < 16 min 35 to 300 °C < 20 min	20 to 200 °C < 15 min 20 to 300 °C < 22 min	35 to 200 °C < 18 min 35 to 300 °C < 26 min	20 to 200 °C < 16 min 20 to 300 °C < 28 min
Cooling rates*	200 to 35 °C < 23 min 300 to 35 °C < 31 min	200 to 20 °C < 27 min 300 to 20 °C < 32 min	200 to 35 °C < 24 min 300 to 35 °C < 32 min	200 to 20 °C < 35 min 300 to 20 °C < 34 min
Leakage @ 10 V	N/A	N/A	< 15 fA at 25 °C < 30 fA at 200 °C < 50 fA at 300 °C	< 15 fA at 25 °C < 30 fA at 200 °C < 50 fA at 300 °C
Electrical isolation	> 5 T Ω at 25 °C > 1 T Ω at 200 °C > 0.5 T Ω at 300 °C	> 5 T Ω at 25 °C > 1 T Ω at 200 °C > 0.5 T Ω at 300 °C	N/A	N/A
Capacitance				
Force-to-Guard	< 1600 pF	< 1600 pF	< 600 pF	< 600 pF
Guard-to-Shield	< 2000 pF	< 2000 pF	< 2000 pF	< 2000 pF

**Typical data for all chucks based on FPS requirements.*

HIGH POWER THERMAL CHUCKS

Specifications of MPI ERS Integrated Technology

Temperature Range	20 to 200 °C	20 to 300 °C
Connectivity	Kelvin Triax (f), 3 kV or 10 kV Coaxial	Kelvin Triax (f), 3 kV or 10 kV Coaxial
Temperature control method	Cooling air / Resistance heater	Cooling air / Resistance heater
Coolant	Air (user supplied)	Air (user supplied)
Smallest temperature selection step	0.1 °C	0.1 °C
Chuck temperature display resolution	0.01 °C	0.01 °C
External touchscreen display operation	Yes	Yes
Temperature stability	±0.08 °C	±0.08 °C
Temperature accuracy	0.1 °C	0.1 °C
Control method	Low noise DC/PID	Low noise DC/PID
Interfaces	RS232C	RS232C
Chuck surface plating	Gold plated with pinhole surface	Gold plated with pinhole surface
Temperature sensor	Pt100 1/3DIN, 4-line wired	Pt100 1/3DIN, 4-line wired
Temperature uniformity	< ± 0.5 °C	< ±0.5 °C at ≤ 200 °C < ±1.0 °C at > 200 °C
Surface flatness and base parallelism	< ±10 µm	< ±10 µm at ≤ 200 °C < ±15 µm at > 200 °C
Heating rates	20 to 200 °C < 31 min	20 to 300 °C < 39 min
Cooling rates*	200 to 20 °C < 57 min	300 to 20 °C < 55 min
Maximum voltage between chuck top and GND	10 kV DC	10 kV DC
Leakage @ 10 V Kelvin Triax (f)		
25 °C	< 15 fA	< 15 fA
200 °C	< 30 fA	< 30 fA
300 °C	--	< 50 fA
Leakage @ 3000 V Kelvin Triax (f)		
25 °C	< 5 pA	< 5 pA
200 °C	< 10 pA	< 10 pA
300 °C	--	< 15 pA
Leakage @ 10 kV Coax UHV/SHV (f)		
25 °C	< 6 nA	< 6 nA
200 °C	< 6 nA	< 6 nA
300 °C	--	< 6 nA

** All data are relevant for chucks in ECO mode.*

Thermal Controller Dimensions / Power and Air Consumption

System type	W x D x H (mm)	Weight (kg)	Power cons. (VA)	max. Air flow*(l/min)
35 to 150 °C	300 x 260 x 135	7	600	200
20 to 200 °C	300 x 360 x 135	12	1000	200
20 to 300 °C	300 x 360 x 135	12	1000	200

** All data are relevant for chucks in ECO mode.*

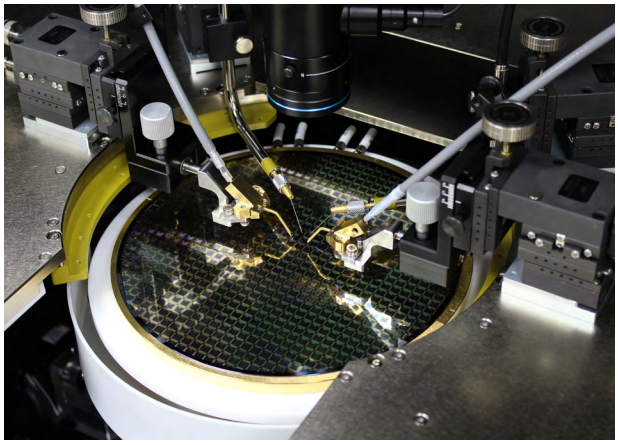

TS2000-DP for accurate high current and high voltage measurements

TS2000-DP (closed DarkBox)

TYPICAL TRANSITION TIME

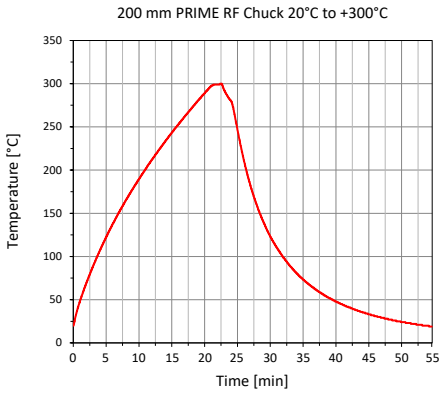

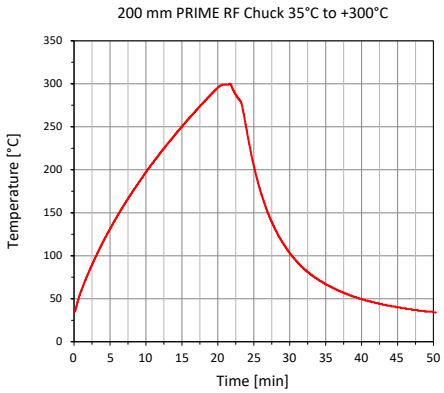

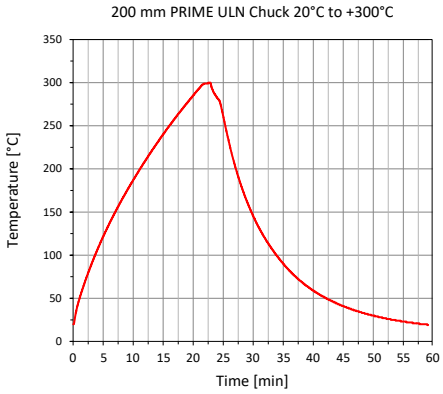

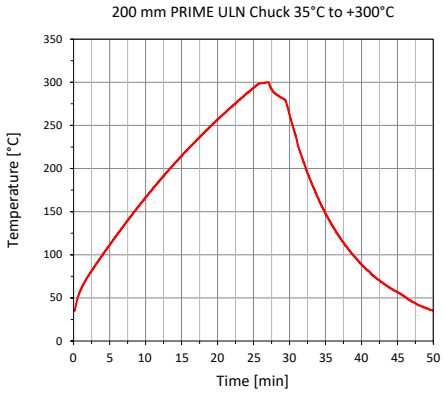

SYSTEM CONTROLLER SPECIFICATIONS

CPU	Intel Core i7
RAM	16 GB
64 bit operating system	Windows 10 Professional (English) 64 bit
Storage	500 GB SSD
LAN	1 x internal, 1 x external TCP/IP port
USB Ports	3 x internal, 1 x external
GPIB interface	Optional

SUPPORTED SOFTWARE PLATFORMS

Drivers	WaferPro / IC-CAP & EasyEXPERT from Keysight, BSIMPro & NoisePro from ProPlus, ACS from Keithley
Emulation mode	Available for various prober control software*

** Please contact your local support for more details.*

FACILITY REQUIREMENTS

General Probe System

Power	100-240 V AC nominal ; 50/60 Hz
Vacuum	-0.9 bar
Compressed air	6.0 bar

General Thermal Chuck

Electrical primary connection	100 to 240 VAC auto switch
Electrical frequency	50 Hz / 60 Hz
Operating pressure	6.0 bar (0.6 MPa, 87 psi) at specified flow rate
CDA dew point	≤ 0 °C for hot chuck system (ambient to 300 °C) ≤ -40 °C for hot and cold chuck system (-60 °C to 300 °C)

REGULATORY COMPLIANCE

3rd party, TÜV tested according to

- IEC 61010-1: 2010 + Am1:2016; EN 61010-1: 2010; IEC/EN 61010-2-010: 2014; IEC/EN 61010-2-081: 2015; EN ISO 12100: 2010; UL 61010-1: 2012/R: 2016-04; UL 61010-2-010: 2015; CAN/CSA-C22.2 No. 61010-1: 2012/U2: 2016-04; CAN/CSA-C22.2 No. 61010-2-010:2015

and certified for CE and US/Canada (NRTL), SEMI S2 and S8.
Copies of certificates are available on request

WARRANTY

- Warranty*: 12 months
- Extended service contract: contact MPI Corporation for more information

**See MPI Corporation's Terms and Conditions of Sale for more details.*

PHYSICAL DIMENSIONS

TS2000

System dimensions (W x D x H)	900 x 1100 x 1345 mm (35.4 x 43.3 x 53.0 in)
Weight	500 kg (1102 lb.)

**Can vary depends on monitor/chiller position.*

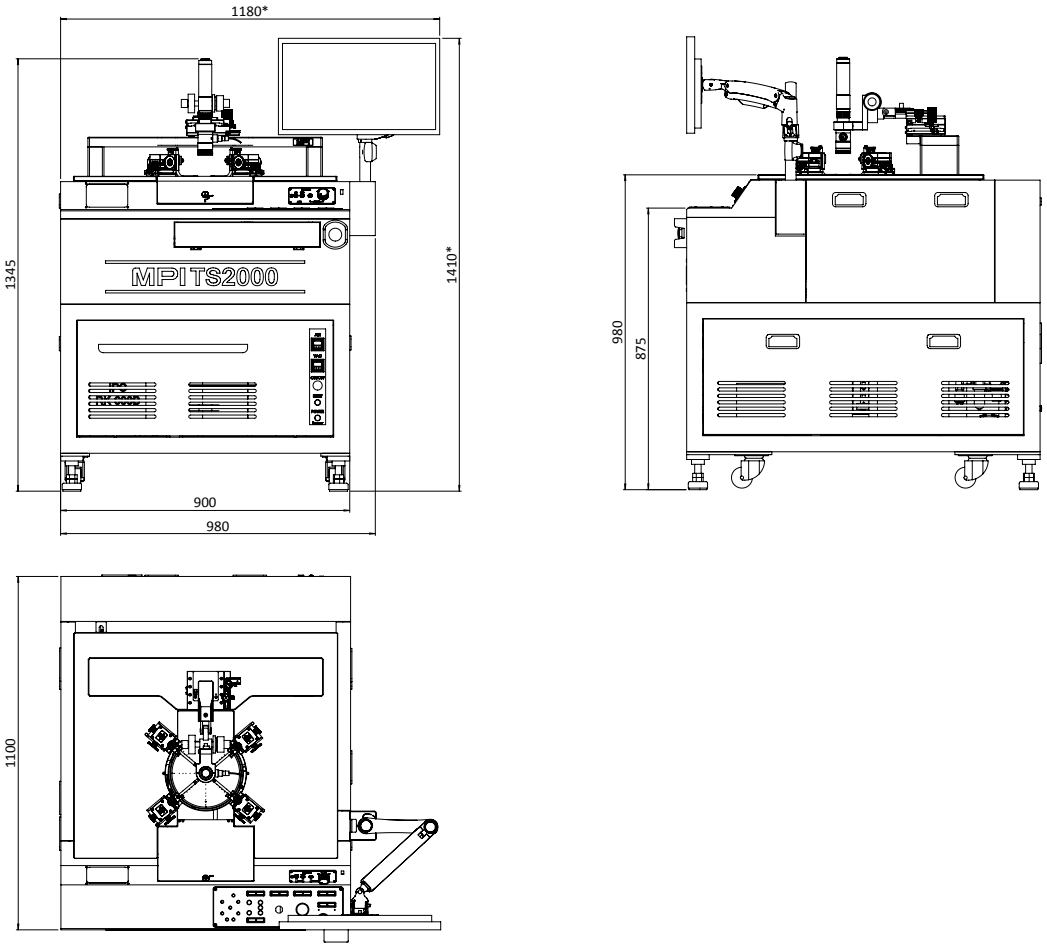

TS2000-D / TS2000-DP

System dimensions (W x D x H)	980 x 1100 x 1650 mm (38.6 x 43.3 x 65.0 in)
Weight	550 kg (1210 lb.)

**Can vary depends on monitor/chiller position.*

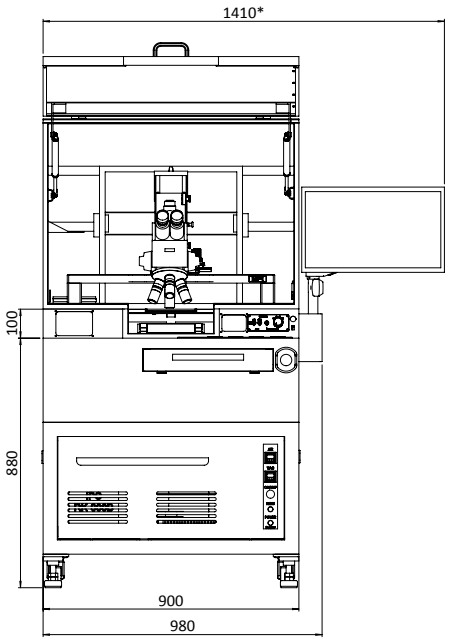

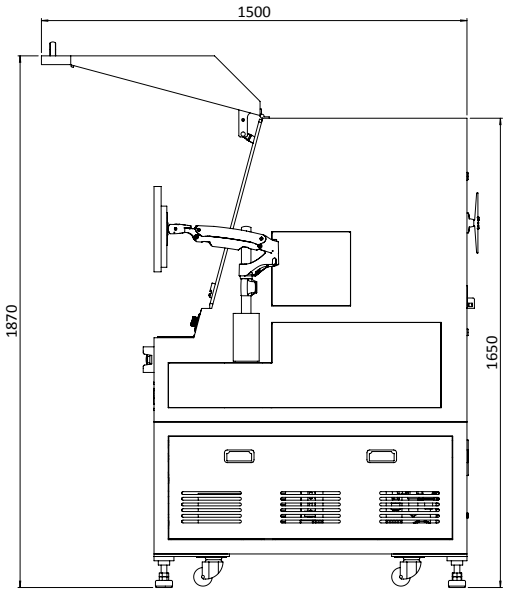

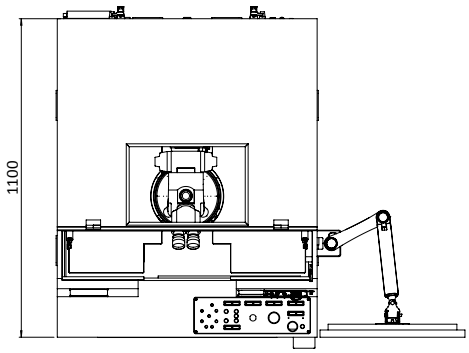

Direct contact:
Asia region: ast-asia@mpi-corporation.com
EMEA region: ast-europe@mpi-corporation.com
America region: ast-americas@mpi-corporation.com

MPI global presence: for your local support, please find the right contact here:
www.mpi-corporation.com/ast/support/local-support-worldwide

© 2024 Copyright MPI Corporation. All rights reserved.